March 5, 1963 N. W. LEWIS 3,079,751

MARINE PROPULSION SYSTEM

Filed Oct. 2, 1961

FIG. 1

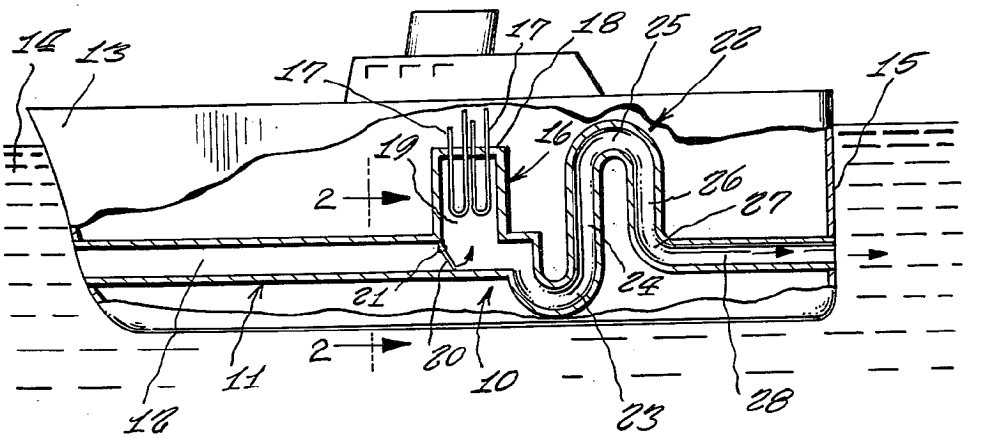

FIG. 2

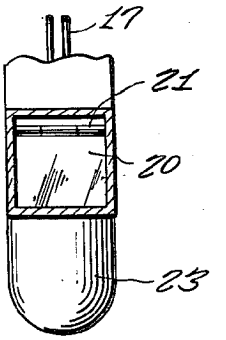

INVENTOR.

NEILSON W. LEWIS

Neilson W. Lewis